IPP FLeXstorm INLET FILTERS

PRODUCT SELECTION for ROUND CASTINGS and CONCRETE OPENINGS

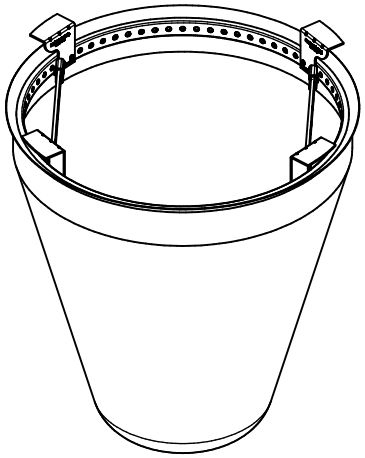

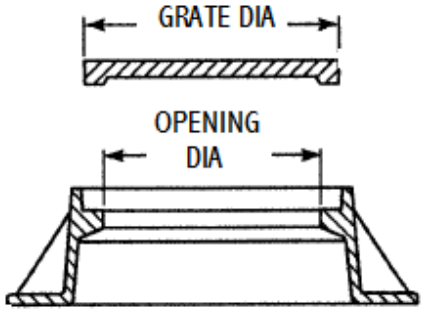

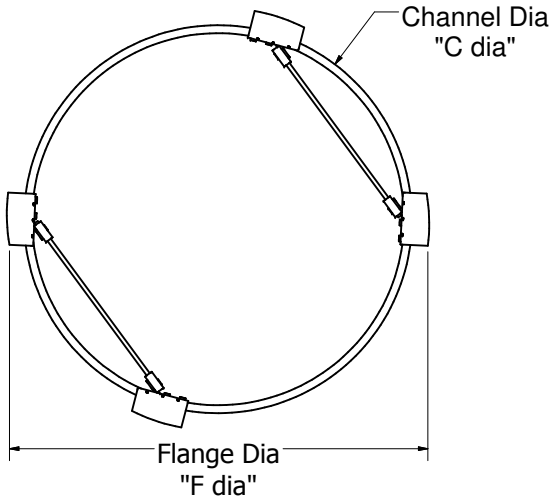

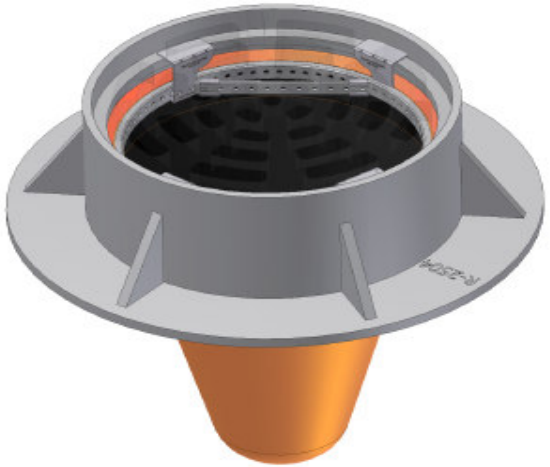

DOT Standard	ST	Neenah	East Jordan	Base FLeXstorm P/N	Grate Size (Dia)	Casting Clear Opening (Dia)	FLeXstorm Flange dia "Fdia"	FLeXstorm Channel dia "Cdia"
		2510-1		R-1500	15.75	15	15.4	13.2
		2525-E		R-1700	18	17	17.5	15.4
		2525-F, 2525-G, 2565-A, 2570, 2586-E	1160, 2900, 2982-20	R-1800	20.0 - 21.0	18 - 18.8	19.5	17.4
A, P	MI	1700-A (2060), 1707 (2571-B), 1710 (2533), 1765 (2466-A), 2535, 2549, 2560-C1, 2560-D, 2560-D1, 2571-A, 2571-C, 2579, 2586-G, 2588-A	1030, 1060, 1130, 1135, 1140, 1170, 1171, 1180, 1190, 1490, 1641, 2850	R-2000	21.75 - 22.75	20	21.4	19.3
		1690-A (2510), 1711-B (2461-A), 1761 (2112), 1792-EG, 2510-A, 2540, 2560-C2, 2560-D2, 2563, 2564, 2586-H	1000, 1010, 1070, 1490, 1550, 1661	R-2100	22.0 - 22.75	20.5	22	19.9
1	IL	1713 (2504), 1762 (2435), 1772 (2502), 1774 (2425), 2560-D5, 2560-D6, 2560-D7, 2560-D8, 2560-E, 2571-D, 2578	1020, 1022-1, 1022-2, 1022-3, 1037, 1050, 1050Z1, 1058, 1510, 1660, 1771, 1850, 1880	R-2200	22.5 - 23.5	21.0 - 21.5	22.6	20.5
4, (B,Q)	IN, (MI)	1678-A (2422-A1), 1714 (2552), 1736 (2421-A), 1771 (2418), 2555, 2586-K, 2595-A, 2680	1118, 1119, 1120, 1120Z1, 1410, 1450, 1590, 1620, 1665, 1710, 1715, 2020, 2860, 2910, 2982-24	R-2250	23.0 - 24.0	21.5 - 22.0	23.3	21.2
		1726-A (2500), 1764, 2553, 2554, 2668, 2571-E	1460, 1600, 1690	R-2300	23.75 - 24.0	22.25 - 23.0	23.9	21.8
		1729 (2650)	1210, 1700, 1703	R-2400	24.5 - 25.625	23	24.8	22.7
		1723 (2401), 1792-FG, 2548, 2572, 2588-B,		R-2500	25.0 - 26.0	23.5	25.2	23.1
		2556, 2556-A, 2559, 2560-E series, 2561, 2573 series, 2577 series, 4353	1040, 1045, 1046, 1047, 1048, 1049, 1080, 1205, 1975, 2800, 2920	R-2550	25.75 - 25.9	24	25.5	23.4
8, (G)	IL, (MI)	2501, 4349-C, 4360-D, 4352, 4350-E	2830, 2870, 6527	R-2600	Beehive, Ditch Grates	24.0 concrete or pipe	26.1	23.1
		2565-F, 2565-G, 2586-M, 2588-C		R-2650	26.0-27.0	24	26.4	23.4

NOTE: Selection not limited to that shown in table. Please specify grate size, clear opening size, or casting make and number.

DRAWN Jamie	10/2/2007	INLET & PIPE PROTECTION
CHECKED		TITLE
QA		FLeXstorm Product Selection for Round Castings / Openings
MFG		
APPROVED		SIZE C / DWG NO FLeXstorm Round / REV
		SCALE / SHEET 1 OF 1